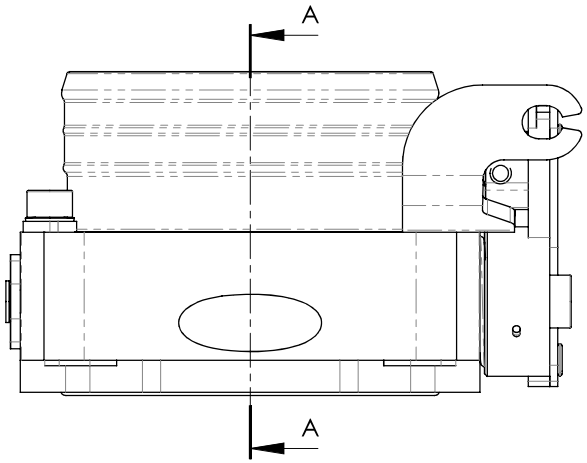

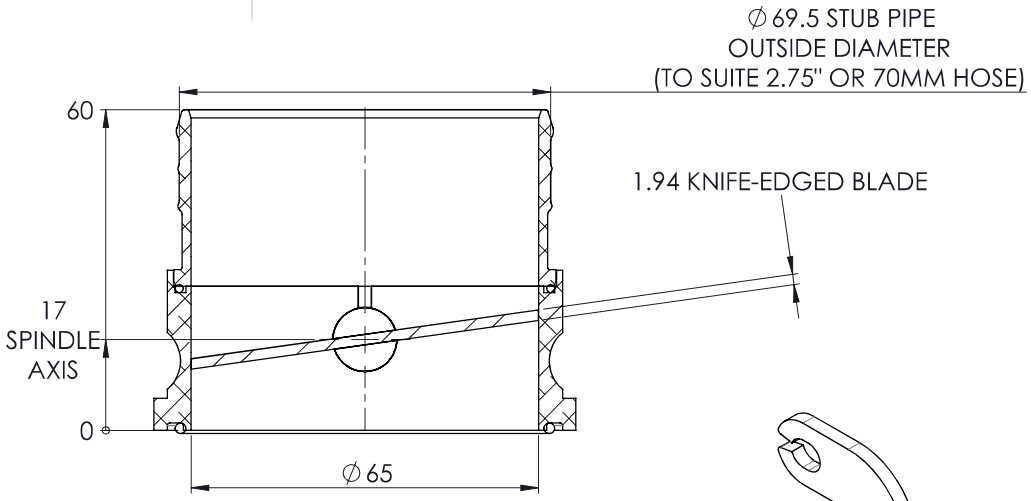

SECTION A-A

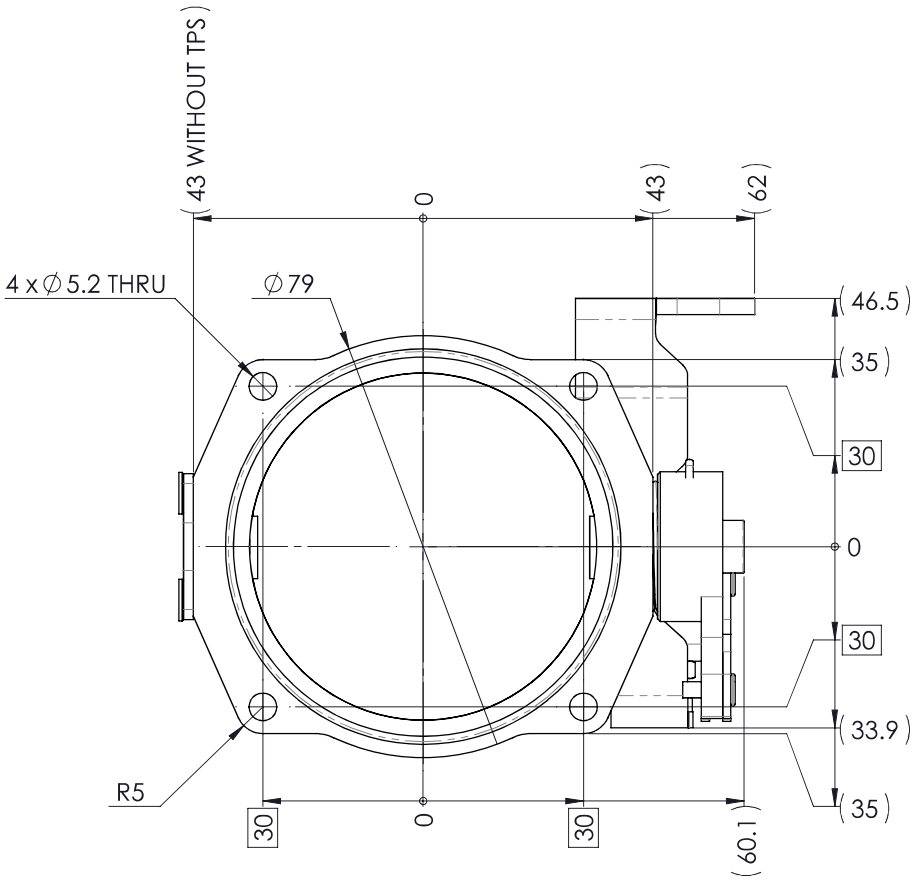

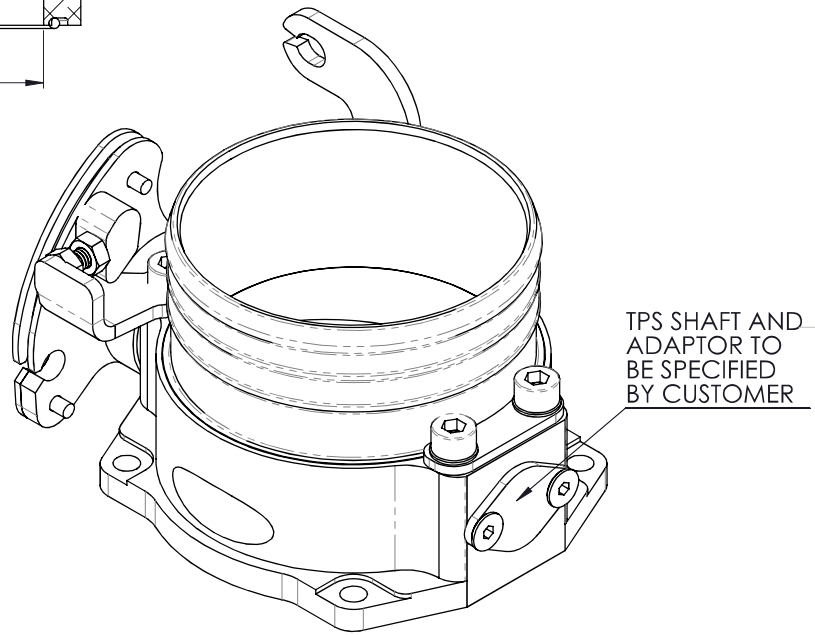

ISOMETRIC VIEW

COPYRIGHT (c) 2013
AT POWER LTD
UNIT 9, CHESTNUT DRIVE, WYMONDHAM,
NORFOLK, UK, NR18 9SB

THIRD ANGLE PROJECTION

SCALE 1:1	WEIGHT 0.3 kg
DRAWN-	S.HOW
DATE -	21/10/15
CHECKED -	M.DAVIS
APPROVED -	A.CLIFTON

UNLESS OTHERWISE STATED:
DIMENSIONS IN MILLIMETRES
TOLERANCES: LINEAR ± 0.1 ANGULAR ± 0.5°
SURFACE FINISH
DRAWING STANDARDS TO ATQS 6003
DATE FORMAT: DD/MM/YY

THIS DESIGN IS THE PROPERTY OF ACTIVE TECHNOLOGIES LTD AND MUST NOT BE REPRODUCED OR COMMUNICATED WITHOUT AUTHORITY

CAD PLOT DO NOT SCALE

MATERIAL
SEE COMPONENT PARTS

FINISH
SEE COMPONENT PARTS

DRAWING TITLE
ASSY - SINGLE BORE - 65MM

DRAWING NUMBER
102-120-00011

SHEET 2 OF 2 A3